NEMESIS RAILGUN

RRP $549(1.1-1.7m)

Xen Trophy handle

- Offers the same features as the Pelaj Xen handle PLUS:
- cutting edge design – short listed for 2007 Australian Design Awards (http://www.designawards.com.au/application_detail.jsp?status=3&applicationID=747);
- Australian registered design (#13743);
- ultra comfortable, fully ambidextrous (use left or right handed) ergonomic Santaprene grip features palm ball allowing very efficient X/Y axis movements;
- large high visibility loading pad;
- 316 SS line release.

Double Tap muzzle

- Australian registered design (#13742);
- fits 2 clip in Powerbands which can easily be fitted or removed without tying;
- muzzle design aligns Powerbands perfectly parallel to spear travel ensuring optimum power transfer to spear resulting in faster, harder hitting, more accurate shots;
- retro fits any 28mm barrel;
- floating 316 SS pins for easy fitting/dismantling and ships with 316SS floating fastener;
- integrated bungee anchor/reel line eye;
- symmetrical line grooves and wings;
- interlocking grooves for perfect alignment with Pelaj railgun barrels;
- extra large spear hole and twin channel spear grooves accommodate spears from 6mm - 10mm;
- moulded from PA66 glass filled nylon;
- simply the best double rubber muzzle on the market.

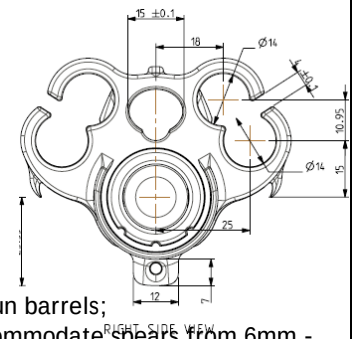

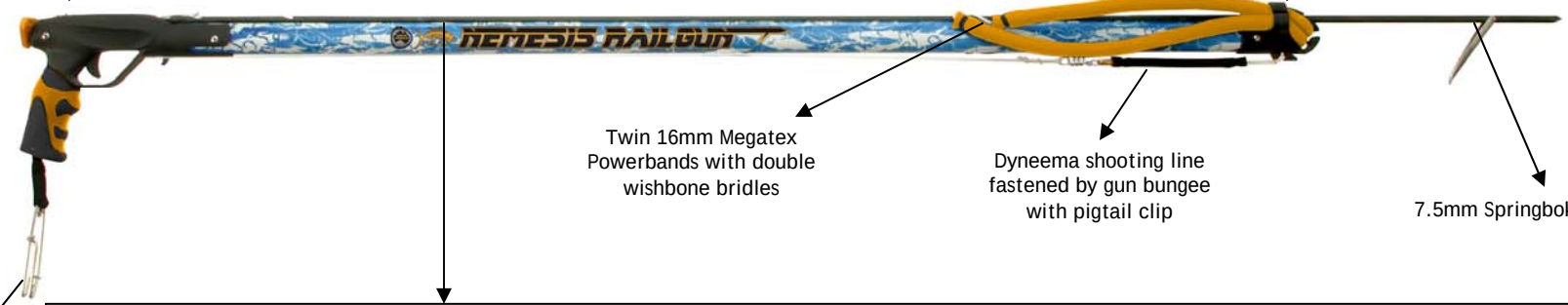

Twin 16mm Megatex Powerbands with double wishbone bridles

Dyneema shooting line fastened by gun bungee with pigtail clip

7.5mm Springbok shaft

Orca clip with swivel on polypropylene webbing

Rhino Speed Rail barrel
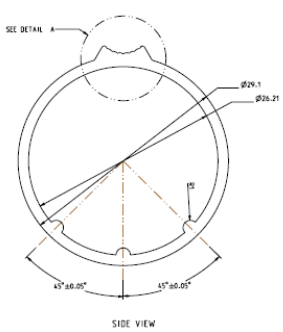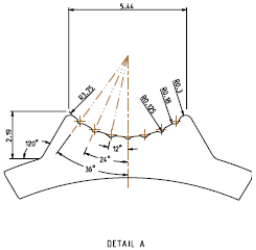
- Hoocam anodizing for the ultimate Bluewater camo;
- Barrel features patented (#100717) internal structural Rhino ribs which substantially increase rigidity, virtually eliminate barrel flex and ensure optimum energy transfer allowing multiple shorter rubbers;
- Rail features patented longitudinal speed striations which reduce noise/pressure wave amplitude, reduce metal to metal contact and increases hydroplaning effect reducing friction and vibration thus increasing velocity;
- **guaranteed to be the fastest strongest 28mm aluminum barrel on the market today;**
- 28mm internal diameter;
- Extra wide spear groove minimizes the likelihood of spears falling out;
- Extruded from 6063 grade aerospace alloy barrel – the strongest, lightest alloy available;
- Available in 10cm increments from 1.1 – 1.7m - ships with 316SS floating fastener;
- Assembles with all Pelaj muzzles and handles;
- does not fit any other Euro mechanism.